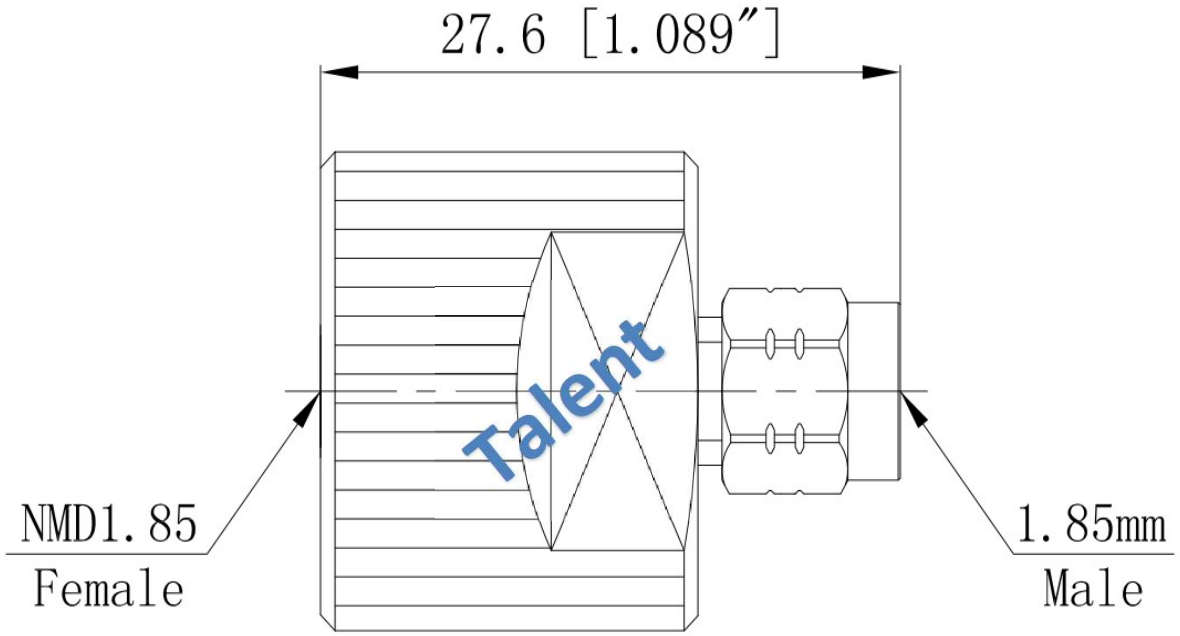

Electrical & Environmental Characteristics	
Impedance	50 Ohm
Insulation Resistance	5000 MΩ
Operating Frequency	DC～67 GHz
Dielectric Withstanding Voltag	1000 V
VSWR	≤1.30:1
Insertion Loss	0.1*Sqt(f_GHz) dB
Operating Temperature	-55～+165℃
Material & Coat-Plating	
Inner Conductor	Beryllium copper, Gold
Dielectric	PEI
Body	Stainless Steel, Passivated
Coupling Nut	Stainless Steel, Passivated

THIS DRAWING IS A CONTROLLED DOCUMENT		DWN	Suzhou Talent Microwave,Inc
		CHK	
Unit mm	TOLERANCES UNLESS OTHERWISE SPECIFIED 0 PLC ±0.25 1 PLC ±0.15 2 PLC ±0.12 3 PLC ±- 3 PLC ±- ANGLES ±1°	APVD	Product Mode
		PRODUCT SPEC	NMD1.85F1.85M NMD1.85mm Female to 1.85mm Male Adaptor
		APPLICATON SPEC	
MATEIAL SEE TABLE	FINISH SEE TABLE	WEIGHT	SIZE A4 / GAGE CODE 0T8L4 / DRAWING NO
		CUSTOMER DRAWING	SCALE 4：1 / SCALE 4：1 / SHEET1 OF 1 / RVE 1